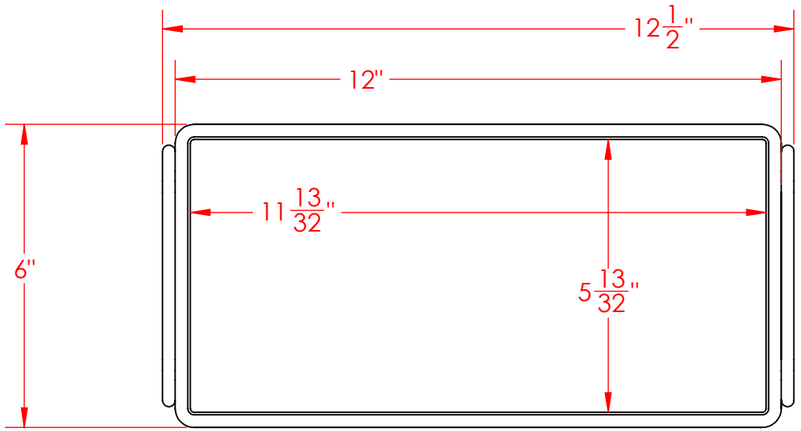

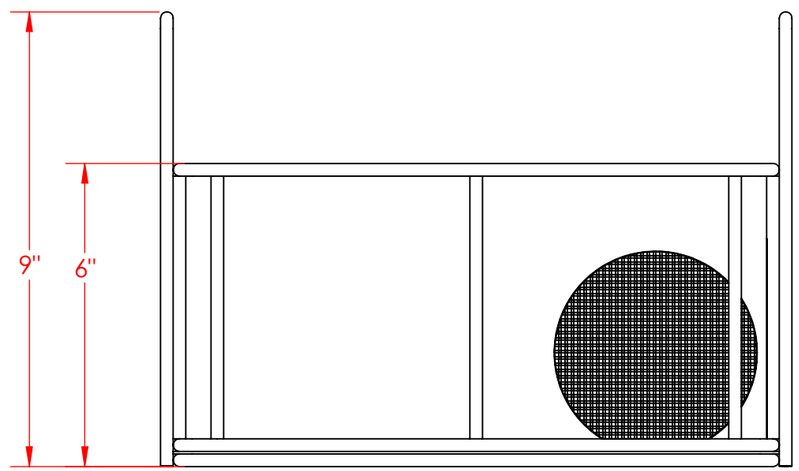

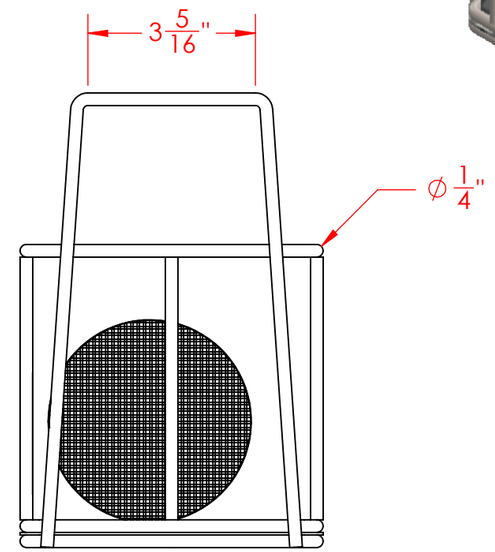

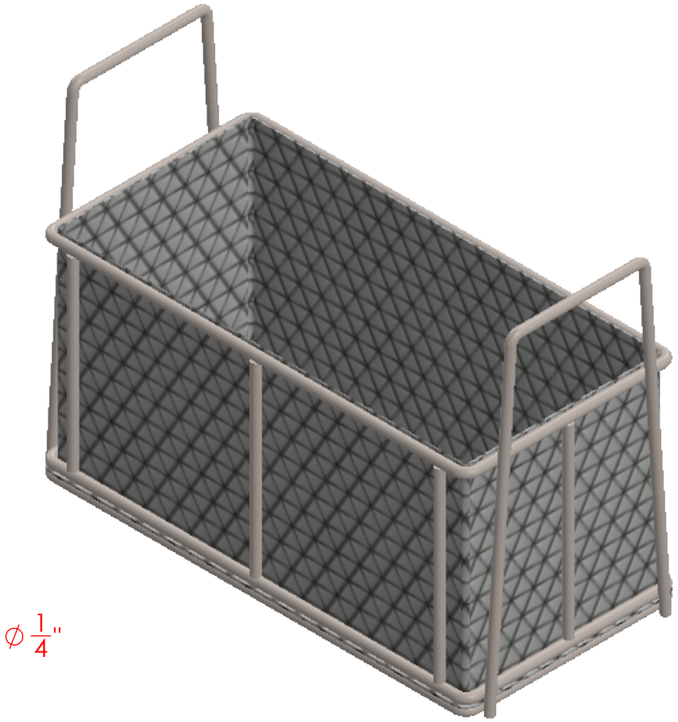

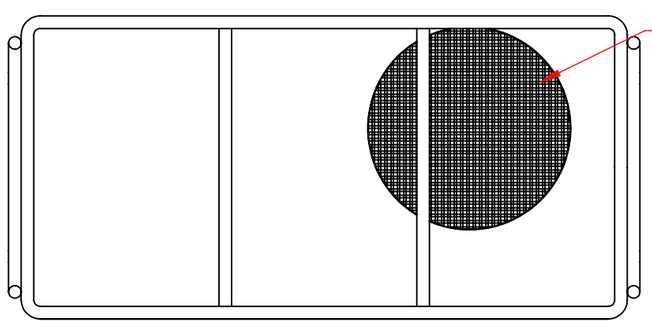

Lined Bottom and Sides with
8 Mesh x .047" Woven Wire
(.078" Openings, 39% Open Area)

PROPRIETARY AND CONFIDENTIAL

THE INFORMATION CONTAINED IN THIS DRAWING IS THE SOLE PROPERTY OF THREE M TOOL. ANY REPRODUCTION IN PART OR AS A WHOLE WITHOUT THE WRITTEN PERMISSION OF THREE M TOOL IS PROHIBITED.

UNLESS OTHERWISE SPECIFIED:

DIMENSIONS ARE IN INCHES
TOLERANCES:
FRACTIONAL ± 1/16"
ANGULAR: ± 5 DEG.
TWO PLACE DECIMAL ±0.03
THREE PLACE DECIMAL ±0.015

EST WGT
5.0 lbs.

MATERIAL
304 Stainless Steel

FINISH
Natural

DO NOT SCALE DRAWING

Rectangular Wire Mesh Basket: 12Lx6Wx6H, 304 SS, 1/4 Rod Frame, Stacking Handles, Mesh: 8 x .047

SIZE **B**

DWG. NO.
TMT-120060060-A08S

SCALE: 1:3

SHEET 1 OF 1